SWEDRIVE

CUSTOMIZED MOTION – SUSTAINABLE POWER

Electromechanical cylinders

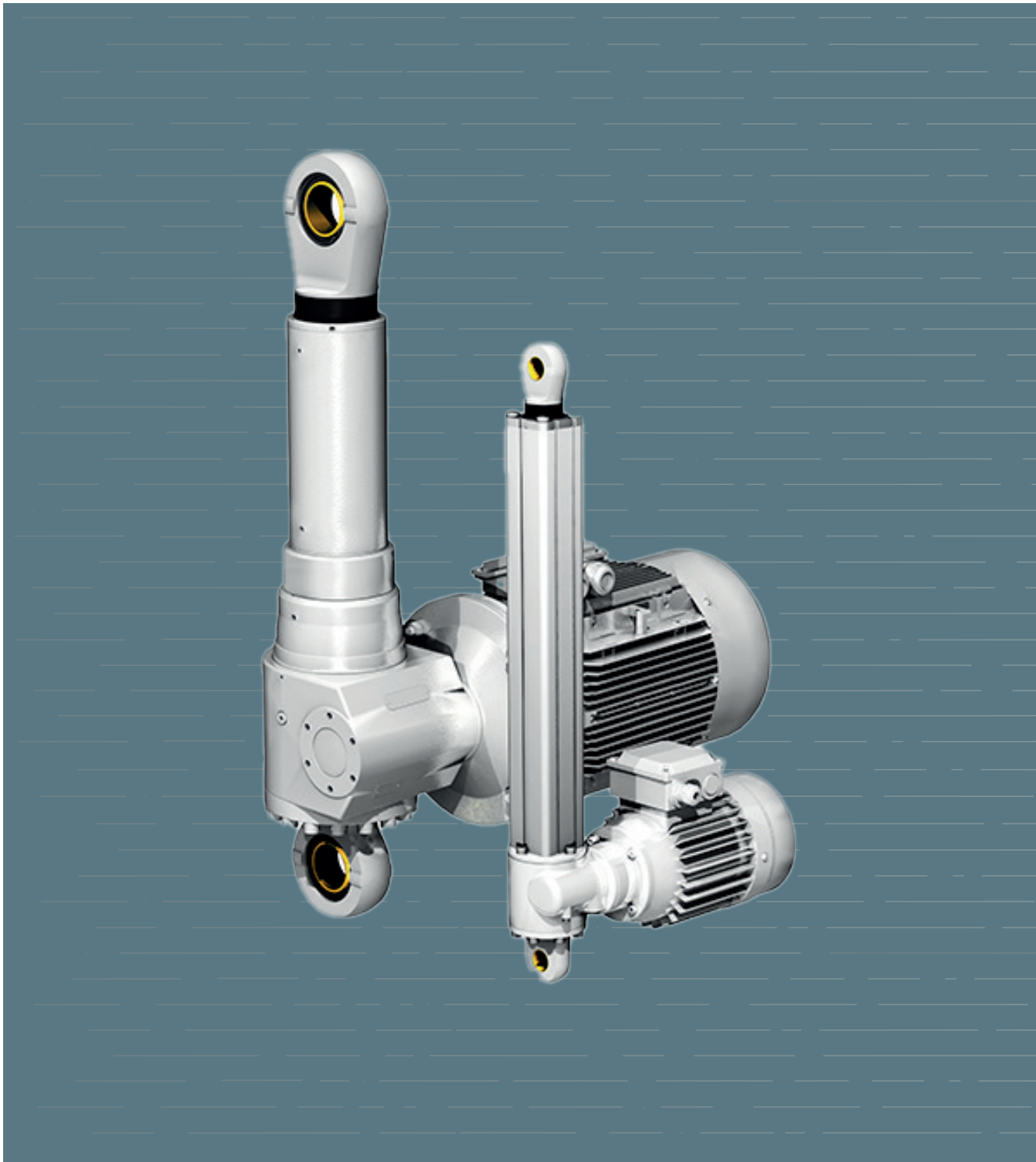

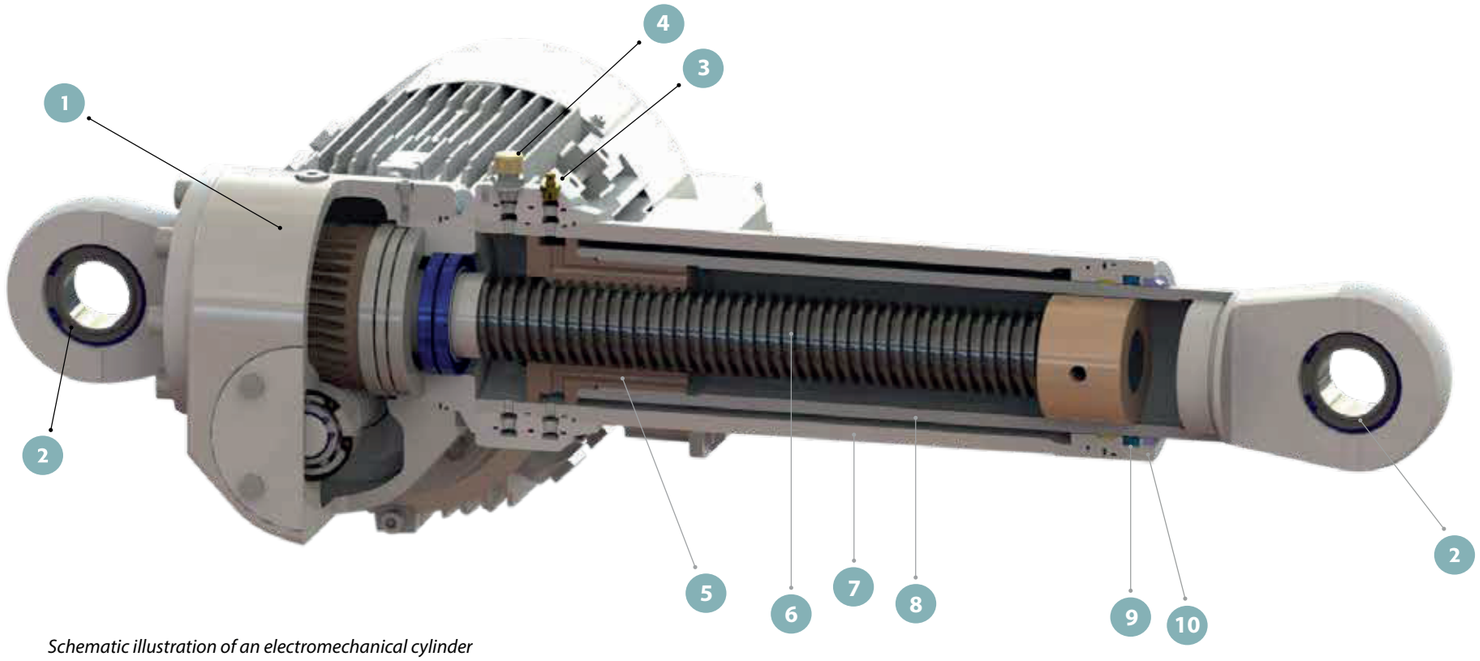

Schematic illustration of an electromechanical cylinder

1	Worm gear drive
2	Spherical bearing
3	Grease nipple
4	Bleed nipple
5	Travelling nut
6	Trapezoidal spindle
7	Cylinder tube
8	Piston
9	Seal
10	Wiper

General information:
Because our electromechanical cylinders are intended as an alternative to hydraulic cylinders we want to point out an important difference in order to avoid problems and failures.
Our cylinders must NOT be driven against fixed or uncontrolled stops, as these units generate significantly higher forces in such a situation than the nominal forces given in this catalogue.
If more precise positioning is required we recommend that the unit is driven by an inverter to be able to adjust and lower the speed to avoid uncontrolled extention.
Electromechanical cylinders as a whole cannot tolerate transverse forces.
For information on installation and maintenance, see the operating instructions on our website **www.swedrive.se** under Documents, Electromechanical cylinders.

ALMOST ZERO ENVIRONMENTAL IMPACT

Swedrive electromechanical cylinders offer an excellent alternative to pneumatic and hydraulic cylinders for creating linear motion.

Electromechanical cylinders are taking over the market

Our unique range of cylinders is the result of many years of experience in developing gear drives and mechanical jacks.

Today, our cylinders can be found in the defence industry, pulp and paper industry, materials handling, shipbuilding, medical applications, and other areas where total reliability in harsh environments is a key requirement.

Their low environmental impact alone supports the choice to switch from traditional pneumatic and hydraulic systems. But there are many other arguments in their favour:

- Minimal environmental impact; ideal in locations where freedom from oil leaks is important
- Low noise level
- Energy is only used during motion
- Minimal rebound, easy to secure against unwanted movement during static loading
- Precise positioning and repeatability
- Easy to control desired stroke length and actuation time
- Speed is independent of load and direction of force
- Fast and easy installation
- Ability to operate multiple cylinders in parallel with the aid of mechanically or electrically operated shafts
- Fully enclosed design enables use in a variety of difficult environments
- Minimal servicing requirements

© Copyright Swedrive AB 2018
This information may only be reproduced – in part or in whole – with the consent of Swedrive. Swedrive reserves the right to change specifications and other data in this catalogue without

STANDARD CONFIGURATIONS FROM CATALOGUE

- Trapezoidal spindle
- Spherical bearings on all sizes except MCT20
- Steel cylinder tube except for MCT20 and MCT30, which instead use an aluminium extrusion
- Piston treated with Corr-I-Dur
- Grease nipple on MCT75–MCT250; grease port on MCT20 and MCT30
- Surface treatment: Swedrive paint system MS001, RAL 9016 (White), aluminium extrusion on MCT20 and MCT30 is anodized and requires no further surface treatment.
- Not rotation locked
- Designed for ambient temperature range -20°C/+40°C
- Fan-cooled IP55 class 3-phase motor for 230/400 V +/- 10%, 50 Hz up to 3 kW, and 400/690 V +/-10%, 50 Hz from 4 kW upwards.
- All sizes are CE marked in compliance with EU Machinery Directive 2006/42/EC

The data given in this catalogue are guideline values and based on operation in an industrial environment and at an ambient temperature of 20°C.

NON-STANDARD CONFIGURATIONS

In addition to standard configurations we can offer custom features such as:

Surface treatment:
- Various surface treatments, for example to meet corrosion classes C4 and C5
- Custom colours

Environment:
- Cylinders for ATEX or corrosive environments, see info on page 16
- Ambient temperatures outside the range -20°C/+40°C

Special adaptations:
- Custom cylinders with alternative gear ratios and/or ball/roller spindles to meet requirements for power, speed and ED beyond those specified in the catalogue
- Custom eyes/mountings
- Double-ended drive shaft
- Complete assemblies comprising multiple cylinders with transfer shafts and bevel gears, see example on page 16

Motors:
- Alternative voltages and frequencies
- Higher protection class
- Specific efficiency classes
- Standby heater
- Thermistors
- Brake
- Encoder
- Tropical insulation
- Specific approvals, such as UL
- DC motors
- EX specification

SELECTION OF CYLINDER SIZE

Our electromechanical cylinders are available in 5 standard sizes and together cover a range of forces ≤250 kN and speeds ≤6000 mm/min.

MCT 20

MCT 30

MCT75

MCT150

MCT250

Size	MCT 20	MCT 30	MCT 75	MCT 150	MCT 250
Load kN	≤20	≤30	≤75	≤150	≤250
Motor (kW)	0,55-1,1	0,55-1,50	1,1-4,0	2,2-7,5	5,5-15,0

Chart indicating which cylinder size is likely to be suitable for a required load and speed.

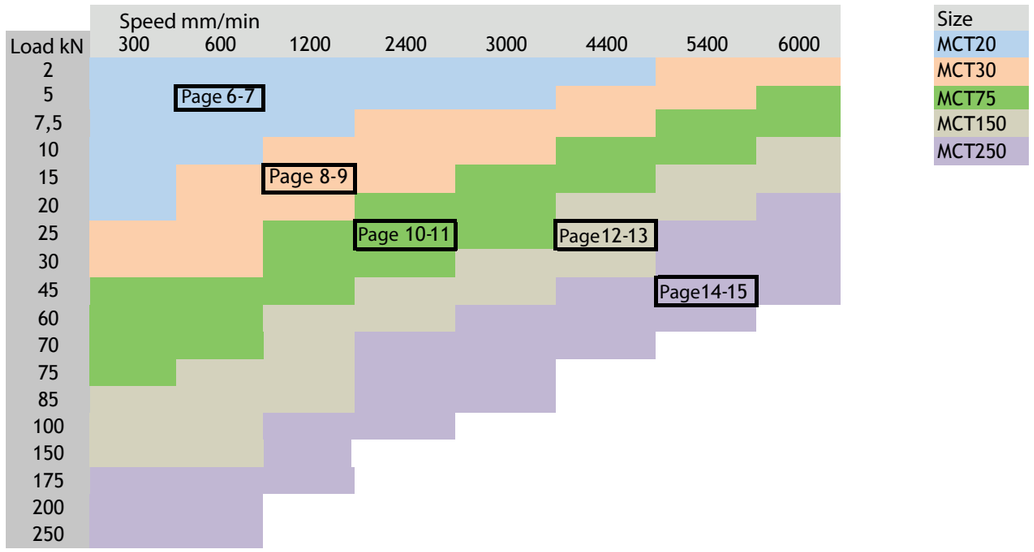

OPTIONS

Limit sensor

To enable accurate positioning, cylinders can be equipped with T-slot cylinder sensors.

MCT20: Sensors are mounted directly in slot in cylinder.
MCT30: Sensors are mounted in adaptors which are then mounted in slot in cylinder.

MCT75-MCT250: These must be fitted with an external sensor cylinder with a slot in which the sensors can be mounted. NOTE! This must be specified at the time of ordering; it cannot be retrofitted!

The following sensors are available as standard in PNP specification for a supply voltage of 10–30 VDC; (supply class 2 according to cULus).

MK5101

Output type: Normally open
Connection: Cable 0.3 m, male connector 1 x M8, snap screw

MK5119

Output type: Normally closed
Connection: Cable 0.3 m, male connector 1 x M8, snap screw

MK5110

Output type: Normally open
Connection: Cable 2 m, 3 x 0.14 mm^2

MK5118

Output type: Normally closed
Connection: Cable 2 m, 3 x 0.14 mm^2

MK5101 and MK5119 can be combined with connecting cables of various lengths.

ELECTROMECHANICAL CYLINDER MCT20

Up to 20 kN, Stroke 100–1000 mm, Speed 636–4380 mm/min

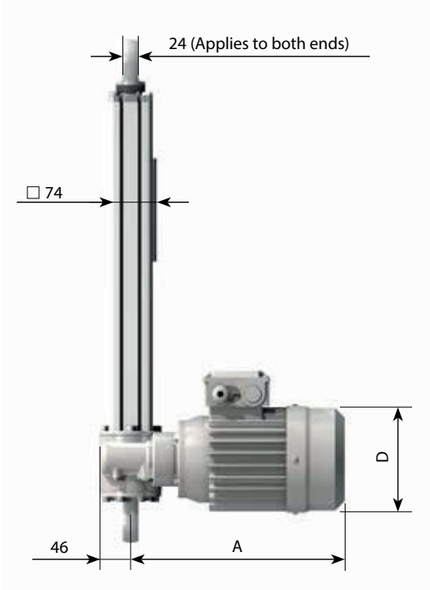

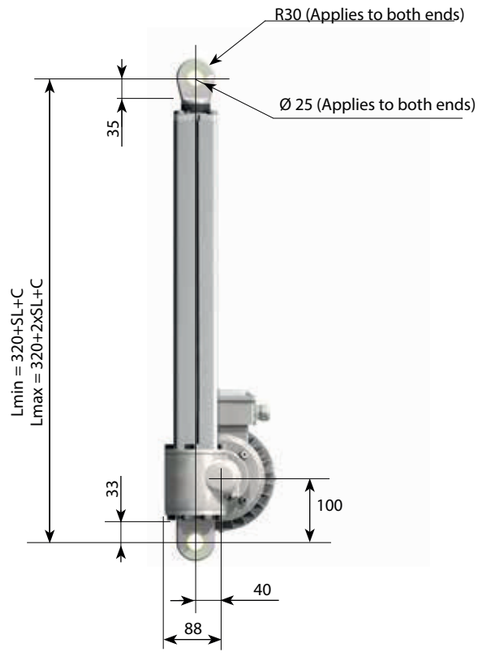

MAX. COMPRESSIVE FORCE TO AVOID BUCKLING

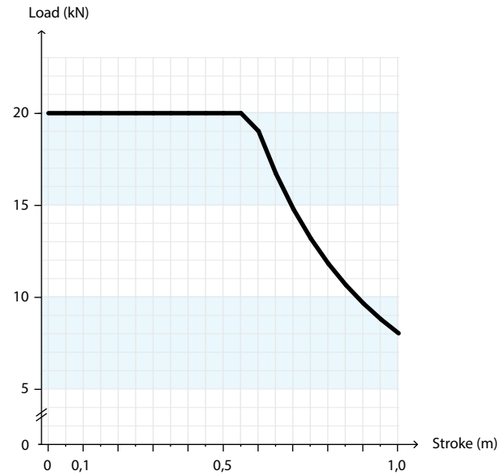

For compressive loads or horizontal mounting with a stroke of over 400 mm the overall length increases according to the following formula: C = 0.25xSL-98 where SL = Stroke

Motor dimensions (mm)

Motor	A (standard)	A (brake motor)	D
80A	320	385	Ø160
80B	320	385	Ø160
80C	320	385	Ø160

ELECTROMECHANICAL CYLINDER MCT20 TR30x6

rpm	Motor/Power	Gear ratio:	7.67:1	11.5:1	23:1	30:1
1400	80B-4 0.75 kW	Load (kN)	10	14		
		V (mm/min)	1100	730		
		ED (%)	11	11		
	80C-4 1.1 kW	Load (kN)	15	22		
		V (mm/min)	1100	730		
		ED (%)	7	8		
2800	80A-2 0.75 kW	Load (kN)	4.8	7	12	16
		V (mm/min)	2200	1460	730	636
		ED (%)	11	11	13	14
	80B-2 1.1 kW	Load (kN)	7.5	11	19	
		V (mm/min)	2200	1460	730	
		ED (%)	7	8	9	

ED = max. run time per hour

ELECTROMECHANICAL CYLINDER MCT20 TR30x12

rpm	Motor/Power	Gear ratio:	7.67:1	11.5:1	23:1	30:1
1400	80B-4 0.75 kW	Load (kN)	7.5	10	19	
		V (mm/min)	2190	1460	730	
		ED (%)	14	15	17	
	80C-4 1.1 kW	Load (kN)	11	16		
		V (mm/min)	2190	1460		
		ED (%)	10	10		
2800	80A-2 0.75 kW	Load (kN)	3.5	5.1	9.3	11
		V (mm/min)	4380	2920	1460	1120
		ED (%)	14	15	17	19
	80B-2 1.1 kW	Load (kN)	5.5	8	14	18
		V (mm/min)	4380	2920	1460	1120
		ED (%)	10	10	12	13

ED = permitted run time per

ELECTROMECHANICAL CYLINDER MCT30

Up to 30 kN, Stroke 100–1000 mm, Speed 246–5340 mm/min

Motor dimensions (mm)

Motor	A (standard)	A (brake motor)	D
71B	340	400	Ø142
80A	390	440	Ø160
80B	390	440	Ø160
90A	415	480	Ø180
90B	435	510	Ø180

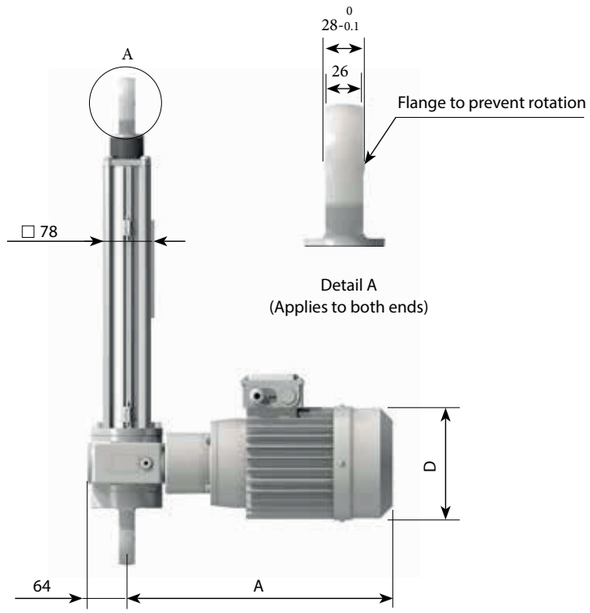

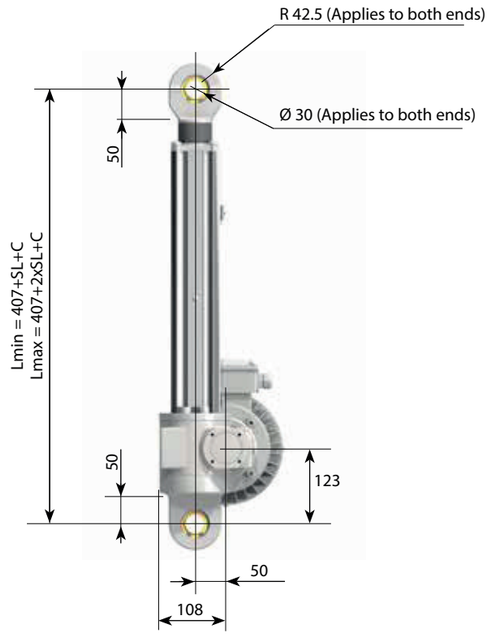

MAX. COMPRESSIVE FORCE TO AVOID BUCKLING

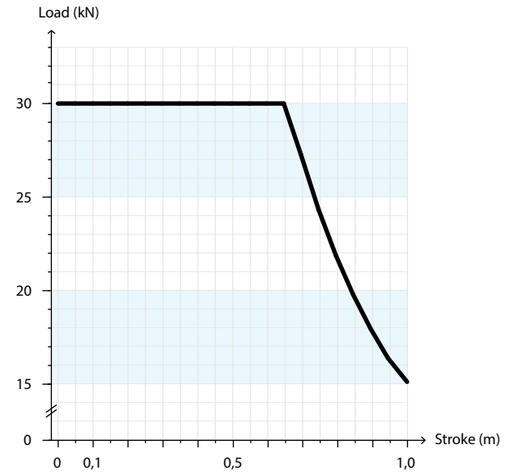

For compressive loads or horizontal mounting with a stroke of over 368 mm the overall length increases according to the following formula: C = 0.25xSL-92 where SL = Stroke

ELECTROMECHANICAL CYLINDER MCT30 TR40x7

rpm	Motor/Power	Gear ratio:	7.33:1	15.5:1	21:1	31:1	40:1
1400	80A-4 0.55 kW	Load (kN)	5.4	11	14	19	23
		V (mm/min)	1338	630	468	318	246
		ED (%)	18	19	21	26	25
	80B-4 0.75	Load (kN)	7.6	15	19	27	30
		V (mm/min)	1338	630	468	318	246
		ED (%)	13	14	16	19	18
	90A-4 1.1 kW	Load (kN)	11	23	29	30	
		V (mm/min)	1338	630	468	318	
		ED (%)	9	10	11	13	
	90B-4 1.5 kW	Load (kN)	14	30			
		V (mm/min)	1338	630			
		ED (%)	7	7			
2800	71B-2 0.55 kW	Load (kN)	2.5	5.0	6.4	9.0	11
		V (mm/min)	2670	1260	936	636	492
		ED (%)	18	19	21	26	25
	80A-2 0.75 kW	Load (kN)	3.5	7.3	9.4	13	16
		V (mm/min)	2670	1260	936	636	492
		ED (%)	13	14	16	19	18
	80B-2 1.1 kW	Load (kN)	5.5	11	14	20	25
		V (mm/min)	2670	1260	936	636	492
		ED (%)	9	10	11	13	12
	90A-2 1.5 kW	Load (kN)	7.5	16	20	28	30
		V (mm/min)	2670	1260	936	636	492
		ED (%)	7	7	8	9	9

ED = max. run time per hour

ELECTROMECHANICAL CYLINDER MCT30 TR40x14

rpm	Motor/Power	Gear ratio:	7.33:1	15.5:1	21:1	31:1	40:1
1400	80A-4 0.55 kW	Load (kN)	4.0	8.3	10	14	18
		V (mm/min)	2670	1266	936	630	492
		ED (%)	24	25	28	34	32
	80B-4 0.75	Load (kN)	5.7	11	14	20	25
		V (mm/min)	2670	1266	936	630	492
		ED (%)	17	19	20	25	24
	90A-4 1.1 kW	Load (kN)	8.7	17	22	30	30
		V (mm/min)	2670	1266	936	630	492
		ED (%)	12	13	14	17	16
	90B-4 1.5 kW	Load (kN)	12	24	30		
		V (mm/min)	2670	1266	936		
		ED (%)	9	9	10		
2800	71B-2 0.55 kW	Load (kN)	1.8	3.7	4.8	6.8	8.5
		V (mm/min)	5340	2532	1872	1260	984
		ED (%)	24	25	28	34	32
	80A-2 0.75 kW	Load (kN)	2.7	5.4	7.1	10	12
		V (mm/min)	5340	2532	1872	1260	984
		ED (%)	17	19	20	25	24
	80B-2 1.1 kW	Load (kN)	4.2	8.6	11	15	19
		V (mm/min)	5340	2532	1872	1260	984
		ED (%)	12	13	14	17	16
	90A-2 1.5 kW	Load (kN)	5.9	12	15	21	27
		V (mm/min)	5340	2532	1872	1260	984
		ED (%)	9	9	10	12	12

ED = max. run time per hour

ELECTROMECHANICAL CYLINDER MCT75

Up to 75 kN, Stroke 100–2300 mm, Speed 249–4800 mm/min

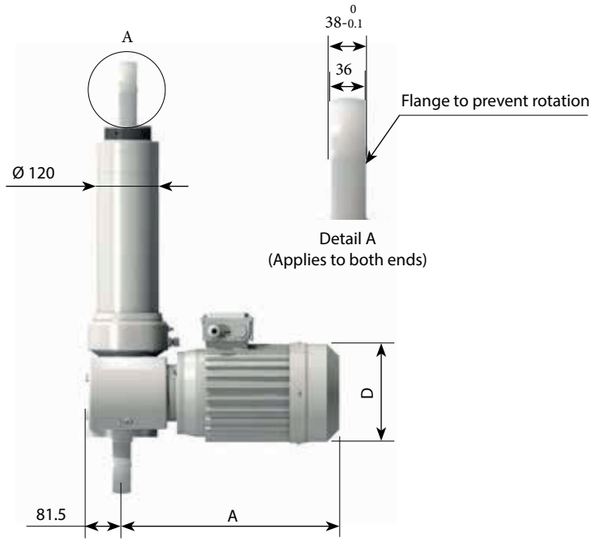

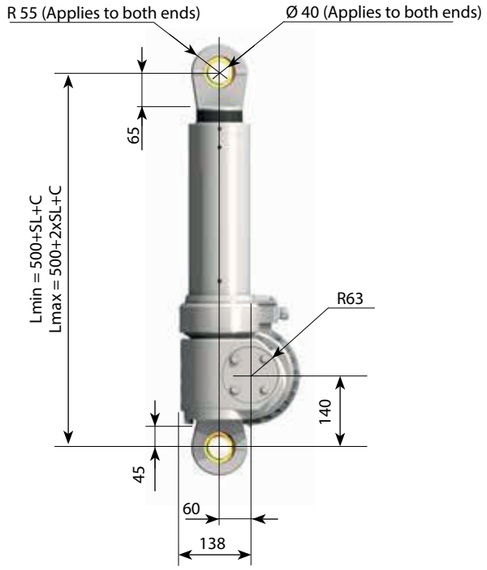

MAX. COMPRESSIVE FORCE TO AVOID BUCKLING

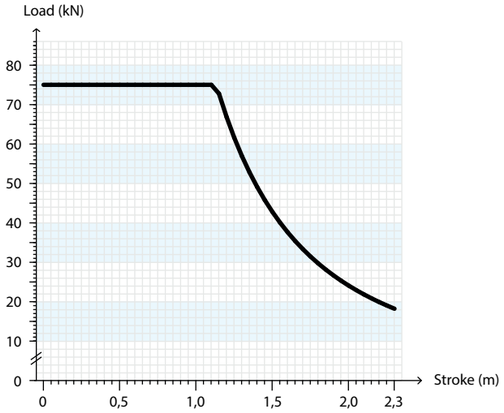

For compressive loads or horizontal mounting with a stroke of over 520 mm the overall length increases according to the following formula: C = 0.25xSL-130 where SL = Stroke

Motor dimensions (mm)

Motor	A (standard)	A (brake motor)	D
90A	370	470	Ø180
100A	425	480	Ø200
100B	425	500	Ø200
112A	450	510	Ø224

ELECTROMECHANICAL CYLINDER MCT75 TR50x8

rpm	Motor/Power	Gear ratio:	9.33:1	23:1	28:1	35:1	45:1
1400	90A-4* 1.1 kW	Load (kN)	11	24	29	34	46
		V (mm/min)	1200	487	400	320	249
		ED (%)	19	22	22	23	24
	100A-4 2.2 kW	Load (kN)	24	48	60	73	75
		V (mm/min)	1200	487	400	320	249
		ED (%)	9	11	11	12	12
	100B-4 3.0 kW	Load (kN)	33	70	75	75	
		V (mm/min)	1200	487	400	320	
		ED (%)	7	8	8	9	
	112A-4 4.0 kW	Load (kN)	45	75			
		V (mm/min)	1200	487			
		ED (%)	5	6			
2800	90B-2* 2.2 kW	Load (kN)	12	24	31	37	46
		V (mm/min)	2400	974	800	640	498
		ED (%)	9	11	11	12	12
	100B-2 3.0 kW	Load (kN)	16	36	43	52	64
		V (mm/min)	2400	974	800	640	498
		ED (%)	7	8	8	9	9
	112A-2 4.0 kW	Load (kN)	22	49	58	71	75
		V (mm/min)	2400	974	800	640	498
		ED (%)	5	6	6	6	7

ED = max. run time per hour

* = Terminal cover rotated

ELECTROMECHANICAL CYLINDER MCT75 TR50x16

rpm	Motor/Power	Gear ratio:	9.33:1	23:1	28:1	35:1	45:1
1400	90A-4* 1.1 kW	Load (kN)	9.0	18	22	26	32
		V (mm/min)	2400	974	800	640	498
		ED (%)	24	27	28	30	31
	100A-4 2.2 kW	Load (kN)	17	39	46	56	60
		V (mm/min)	2400	974	800	640	498
		ED (%)	12	14	14	15	15
	100B-4 3.0 kW	Load (kN)	25	54	60	60	
		V (mm/min)	2400	974	800	640	
		ED (%)	9	10	10	11	
	112A-4 4.0 kW	Load (kN)	34	60			
		V (mm/min)	2400	974			
		ED (%)	7	8			
2800	90B-2 2.2 kW	Load (kN)	9.2	20	23	28	35
		V (mm/min)	4800	1948	1600	1280	996
		ED (%)	12	14	14	15	15
	100B-2 3.0 kW	Load (kN)	12	28	33	40	49
		V (mm/min)	4800	1948	1600	1280	996
		ED (%)	9	10	10	11	11
	112A-2 4.0 kW	Load (kN)	17	37	45	54	60
		V (mm/min)	4800	1948	1600	1280	996
		ED (%)	7	8	8	8	9

ED = max. run time per hour

* = Terminal cover rotated

ELECTROMECHANICAL CYLINDER MCT150

Up to 150 kN, Stroke 100–2300 mm, Speed 228–4584 mm/min

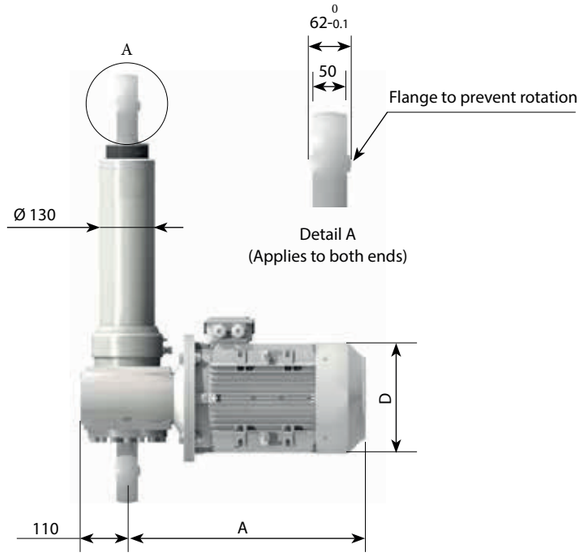

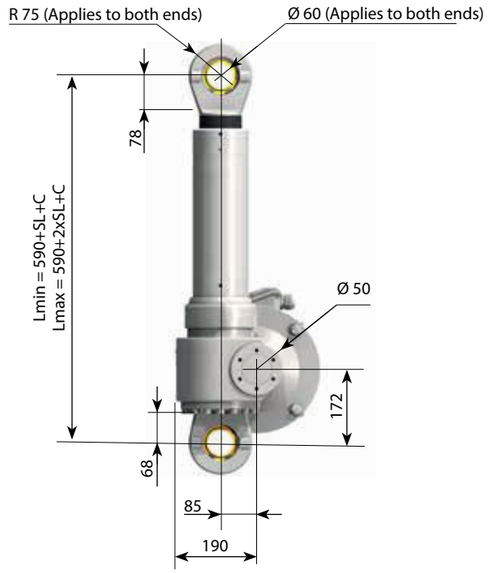

MAX. COMPRESSIVE FORCE TO AVOID BUCKLING

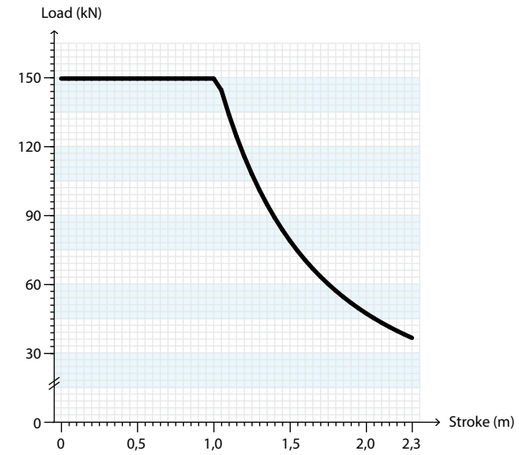

For compressive loads or horizontal mounting with a stroke of over 520 mm the overall length increases according to the following formula: C = 0.25xSL-130 where SL = Stroke

Motor dimensions (mm)

Motor	A (standard)	A (brake motor)	D
100A	465	520	Ø200
112A	490	550	Ø224
132A	525	625	Ø264
132B	565	650	Ø264

ELECTROMECHANICAL CYLINDER MCT150 TR60x9

rpm	Motor/Power	Gear ratio:	11:1	19:1	22.5:1	38:1	55:1
1400	100A-4 2.2 kW	Load (kN)	24	40	47	71	96
		V (mm/min)	1146	666	558	330	228
		ED (%)	27	29	29	33	36
	112A-4 4.0 kW	Load (kN)	45	74	86	131	150
		V (mm/min)	1146	666	558	330	228
		ED (%)	15	16	16	18	20
	132A-4 5.5 kW	Load (kN)	63	104	121	150	
		V (mm/min)	1146	666	558	330	
		ED (%)	11	12	12	13	
	132B-4 7.5 kW	Load (kN)	81	142	150		
		V (mm/min)	1146	666	558		
		ED (%)	8	9	9		
2800	112A-2 4.0 kW	Load (kN)	22	37	44	68	93
		V (mm/min)	2292	1332	1116	660	456
		ED (%)	15	16	16	18	20
	132A-2 5.5 kW	Load (kN)	31	52	61	95	131
		V (mm/min)	2292	1332	1116	660	456
		ED (%)	11	12	12	13	14
	132B-2 7.5 kW	Load (kN)	43	72	85	131	150
		V (mm/min)	2292	1332	1116	660	456
		ED (%)	8	9	9	10	10

ED = max. run time per hour

ELECTROMECHANICAL CYLINDER MCT150 TR60x18

rpm	Motor/Power	Gear ratio:	11:1	19:1	22.5:1	38:1	55:1
1400	100A-4 2.2 kW	Load (kN)	19	31	36	55	74
		V (mm/min)	2292	1332	1116	660	456
		ED (%)	34	37	37	42	45
	112A-4 4.0 kW	Load (kN)	35	58	68	103	120
		V (mm/min)	2292	1332	1116	660	456
		ED (%)	19	20	20	23	25
	132A-4 5.5 kW	Load (kN)	49	80	94	120	
		V (mm/min)	2292	1332	1116	660	
		ED (%)	14	15	15	17	
	132B-4 7.5 kW	Load (kN)	67	110	120		
		V (mm/min)	2292	1332	1116		
		ED (%)	10	11	11		
2800	112A-2 4.0 kW	Load (kN)	17	29	34	53	73
		V (mm/min)	4584	2664	2232	1320	912
		ED (%)	19	20	20	23	25
	132A-2 5.5 kW	Load (kN)	24	41	48	74	101
		V (mm/min)	4584	2664	2232	1320	912
		ED (%)	14	15	15	17	18
	132B-2 7.5 kW	Load (kN)	34	56	66	102	120
		V (mm/min)	4584	2664	2232	1320	912
		ED (%)	10	11	11	12	13

ED = max. run time per hour

ELECTROMECHANICAL CYLINDER MCT250

Up to 250 kN, Stroke 100–2300 mm, Speed 241–6054 mm/min

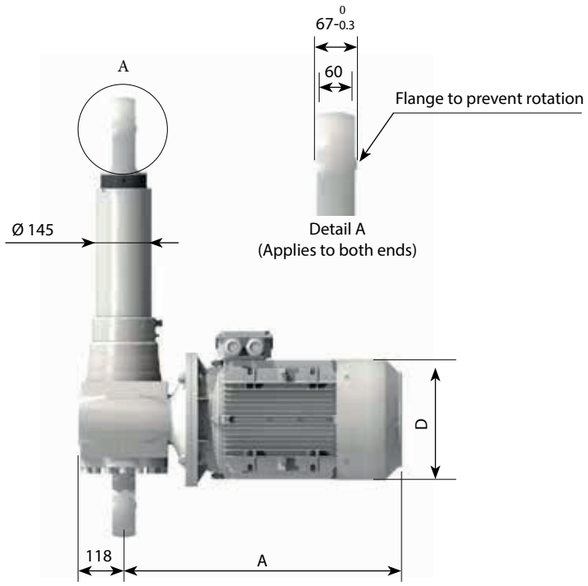

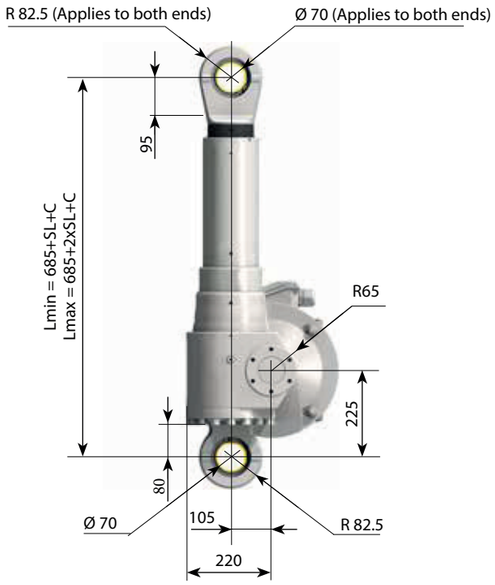

MAX. COMPRESSIVE FORCE TO AVOID BUCKLING

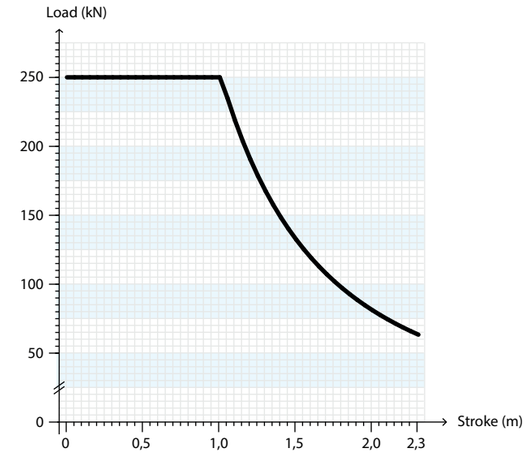

For compressive loads or horizontal mounting with a stroke of over 688 mm the overall length increases according to the following formula: C = 0.25xSL-172 where SL = Stroke

Motor dimensions (mm)

Motor	A (standard)	A (brake motor)	D
132A	530	585	Ø264
132B	570	650	Ø264
160A	675	770	Ø320
160B	720	770	Ø320

ELECTROMECHANICAL CYLINDER MCT250 TR80x10

rpm	Motor/Power	Gear ratio:	9.25:1	24.5:1	29:1	49:1	58:1
1400	132A-4 5.5 kW	Load (kN)	42	104	121	184	212
		V (mm/min)	1514	571	483	286	241
		ED (%)	23	25	25	28	29
	132B-4 7.5 kW	Load (kN)	58	142	166	250	250
		V (mm/min)	1514	571	483	286	241
		ED (%)	17	18	18	21	21
	160A-4 11.0 kW	Load (kN)	86	210	245		
		V (mm/min)	1514	571	483		
		ED (%)	11	12	12		
	160B-4 15.0 kW	Load (kN)	117	250	250		
		V (mm/min)	1514	571	483		
		ED (%)	8	9	9		
2800	132A-2 5.5 kW	Load (kN)	21	52	61	95	110
		V (mm/min)	3028	1143	966	571	483
		ED (%)	23	25	25	28	29
	132B-2 7.5 kW	Load (kN)	29	72	85	131	152
		V (mm/min)	3028	1143	966	571	483
		ED (%)	17	18	18	21	21
	160A-2 11.0 kW	Load (kN)	43	107	126	195	226
		V (mm/min)	3028	1143	966	571	483
		ED (%)	11	12	12	14	15
	160B-2 15.0 kW	Load (kN)	59	148	173	250	250
		V (mm/min)	3028	1143	966	571	483
		ED (%)	8	9	9	10	11

ED = max. run time per hour

ELECTROMECHANICAL CYLINDER MCT250 TR80x20

rpm	Motor/Power	Gear ratio:	9.25:1	24.5:1	29:1	49:1	58:1
1400	132A-4 5.5 kW	Load (kN)	34	83	97	147	170
		V (mm/min)	3027	1143	966	571	483
		ED (%)	28	30	30	35	36
	132B-4 7.5 kW	Load (kN)	46	114	133	200	200
		V (mm/min)	3027	1143	966	571	483
		ED (%)	20	22	22	25	26
	160A-4 11.0 kW	Load (kN)	69	169	197		
		V (mm/min)	3027	1143	966		
		ED (%)	14	15	15		
	160B-4 15.0 kW	Load (kN)	94	200			
		V (mm/min)	3027	1143			
		ED (%)	10	11			
2800	132A-2 5.5 kW	Load (kN)	17	42	49	76	88
		V (mm/min)	6054	2286	1931	1143	966
		ED (%)	28	30	30	35	36
	132B-2 7.5 kW	Load (kN)	23	58	68	105	122
		V (mm/min)	6054	2286	1931	1143	966
		ED (%)	20	22	22	25	26
	160A-2 11.0 kW	Load (kN)	34	86	101	156	181
		V (mm/min)	6054	2286	1931	1143	966
		ED (%)	14	15	15	17	18
	160B-2 15.0 kW	Load (kN)	47	118	138	200	200
		V (mm/min)	6054	2286	1931	1143	966
		ED (%)	10	11	11	13	13

ED = max. run time per hour

ELECTROMECHANICAL CYLINDERS FOR HARSH ENVIRONMENTS

ATEX

Electrical and mechanical equipment for use in an explosive environment in Europe must comply with ATEX Directive 2014/34/EU. This directive applies to equipment and protection systems intended for use in potentially explosive atmospheres, components intended for use in such products, and safety and regulatory devices intended for use outside such risk areas but which are essential for or contribute to the safety of EX products in the risk area.

We can offer ATEX-rated cylinders on request for various zones and levels.

CORROSIVE ENVIRONMENTS

For use in corrosive environments in which our standard cylinders are unsuitable, we offer our range of WE cylinders. Our WE cylinders have stainless steel pistons and spherical bearings, and other components are carefully selected to withstand corrosive environments. These units are given surface treatments that meet the customer's specific corrosion class requirements or the customer's own specifications.

Contact us for more information about these cylinders.

CONFIGURATION EXAMPLE

Two MCT30 units driven by a single motor. Contact us for more information about possible configurations.

BUILD YOUR ELECTROMECHANICAL CYLINDERS

Please provide the following information if you have an enquiry or wish to place an order for a standard cylinder from the catalogue:

Cylinder size:	e.g. MCT75 TR50x8
Direction of force:	Push/Pull
Gear ratio and Motor size:	e.g. 23:1 and 112A-4 4.0 kW
or	
Load (kN) and Speed (mm/min):	e.g. 75 kN and 487 mm/min
Stroke (mm):	NOTE! For push applications, remember to check buckling strength
Installation orientation:	Vertical/Horizontal (+/-45° from horizontal plane)
With or without limit sensor:	Yes/No
If limit sensor is required, which type and how many:	e.g. MK5101, 2 pcs

The standard cylinder configuration is as follows:

Motor position	**Right (seen from below**) or left (not applicable to MCT20)
Location of grease nipple/grease port	**Facing motor** or rotated through 90° intervals
Terminal cover location	**Facing top eye** or rotated through 90° intervals
Eye orientation	**Parallel with motor flange** or rotated through 90°

For non-standard requirements and configurations please specify these separately. The Configurator on our website **www.swedrive.se** lets you build and download a model of your desired cylinder.

Standard configuration (in bold type) of our electromechanical cylinders

Swedrive AB manufactures high-quality electromechanical cylinders, worm gear drives, screw jacks and custom solutions for industry. Swedrive is part of Dacke Industri AB.

www.swedrive.se

Use the QR code or visit our website to learn more about the company and to download our catalogues of standard products.

BASED IN SCANDINAVIA

– built for the global market

ABOUT SWEDRIVE

Swedrive is one of Scandinavia's leading manufacturers of high-quality worm gear drives, screw jacks, electromechanical cylinders and custom solutions for industry.

Quality, speed and flexibility

The hallmark of all our products is their high quality combined with our company's active technical development, which enables us to offer customers energy-efficient, cost-optimized products.
Our modular base range and flexible production system also allow us to quickly configure and customize products to suit individual requirements. As a result we always deliver the best solution.

Close collaboration lowers total costs

By combining our experience in designing and manufacturing gear drives with the customer's know-how we can create a product that is optimized for its purpose, and thus build long-term partnerships. This also ensures that the total cost of your solution is significantly lower than if you simply choose standard components. This means that you get a product that is optimized for technical performance, energy efficiency, overall dimensions, ease of service and environmental requirements.

OUR MARKETS

MEDICAL TECHNOLOGY

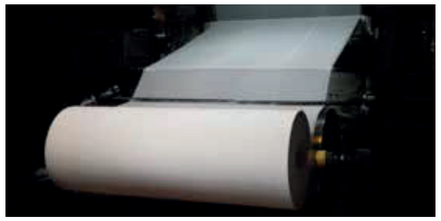

FOREST & PAPER

GATES & DOORS

MACHINE BUILDERS

LIFTING & TRANSPORT

INDUSTRIAL AUTOMATION

MARINE ENGINEERING

FOOD INDUSTRY

AGRICULTURE

DEFENCE INDUSTRY

SWEDRIVE AB

Box 4
SE-341 02 Lagan, Sweden

Visiting address:
Prästtorpsvägen 14
SE-341 51 Lagan, Sweden
Tel.: +46 (0)372-265 00
E-mail: sales@swedrive.se
www.swedrive.se

Utg. 2020-01